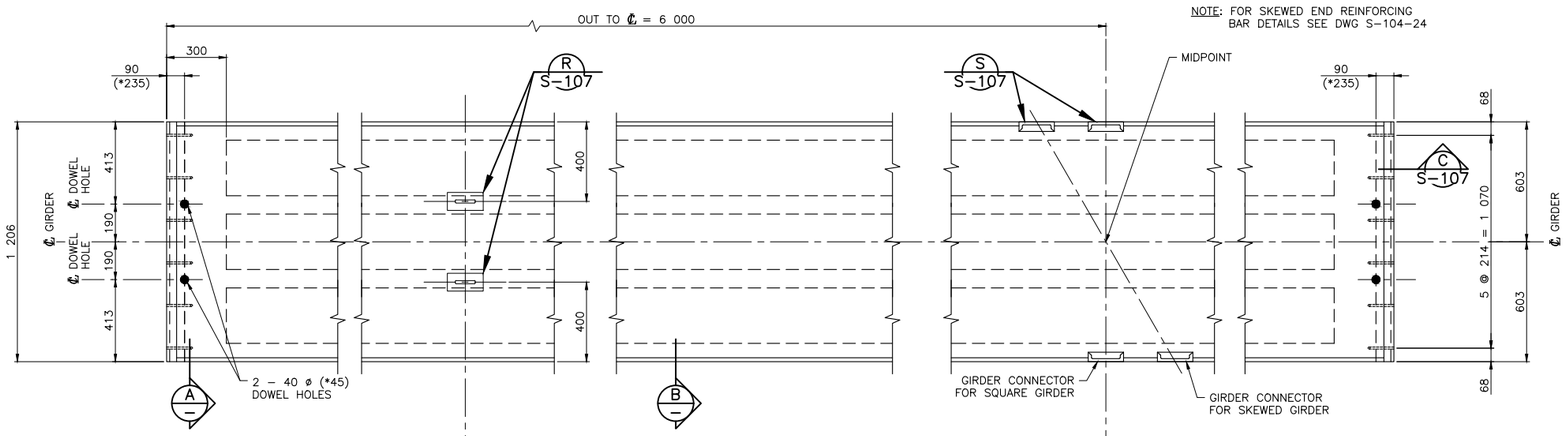

NOTE: FOR SKEWED END REINFORCING BAR DETAILS SEE DWG S-104-24

* NOTE:
FOR BACKWALL TYPE ABUTMENTS, DOWEL HOLES SHALL BE 45 DIA WITH THE CENTRELINE OF HOLE LOCATED 235 FROM THE END OF GIRDER REFER TO STANDARD DRAWING S-111-24 FOR ADDITIONAL DETAILS.

PLAN
1:15

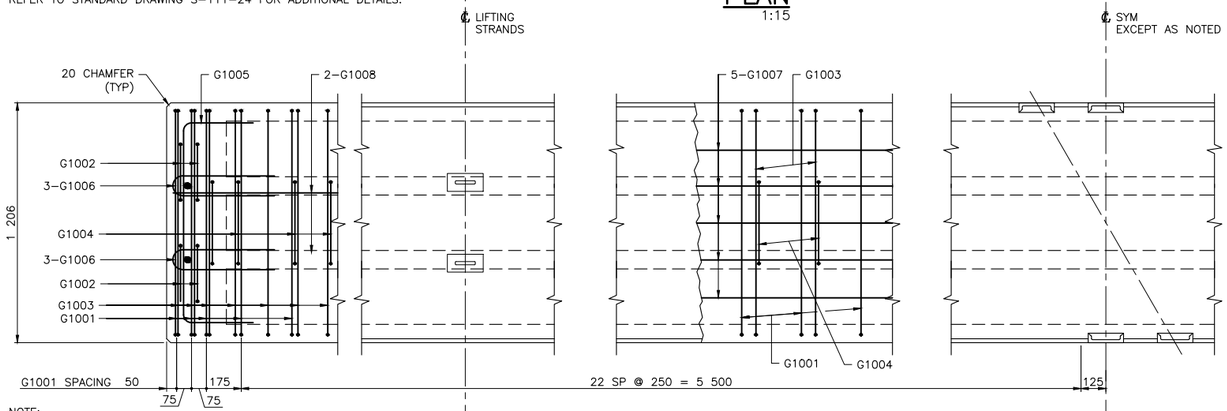

NOTE:
BEND REINFORCING BAR WHERE NECESSARY TO ACCOMMODATE CHANNEL CONNECTORS. STIRRUP SPACING TO BE MAINTAINED.

REINFORCEMENT PLAN
1:15

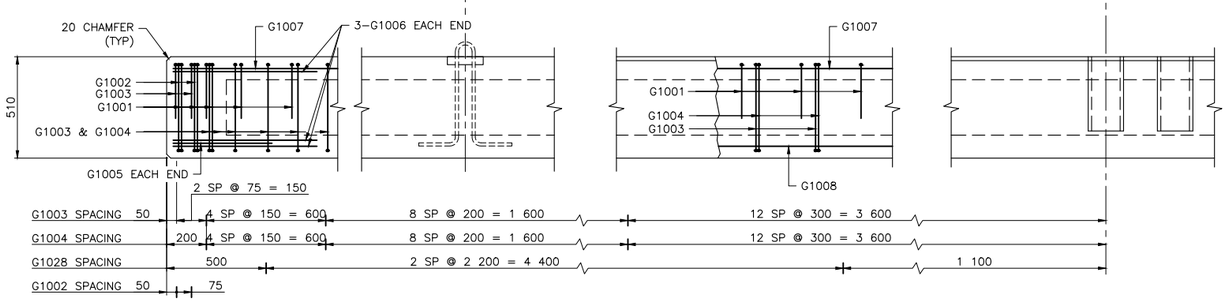

NOTE:
BEND REINFORCING BAR WHERE NECESSARY TO ACCOMMODATE CHANNEL CONNECTORS. STIRRUP SPACING TO BE MAINTAINED.

ELEVATION
1:15

* NOTE:
FOR BACKWALL TYPE ABUTMENTS, DOWEL HOLES SHALL BE 45 DIA WITH THE CENTRELINE OF HOLE LOCATED 235 FROM THE END OF GIRDER. REFER TO STANDARD DRAWING S-111-24 FOR ADDITIONAL DETAILS.

GENERAL NOTES

- FOR ADDITIONAL NOTES, REFER TO DWG S-107-24.
- 20 – 15 ø 7 WIRE STRANDS REQUIRED PER GIRDER.
- STRANDS MARKED ⦿ ARE TO BE DEBONDED FOR 1 400 mm FROM THE GIRDER ENDS.
- FORCE IN PRESTRESSING STEEL:
  INITIAL TENSION BEFORE RELEASE = 195 kN/STRAND
  DESIGN LOAD AFTER LOSSES = 155 kN/STRAND
- FINAL SLS IN BOTTOM FIBRE AT MIDSPAN = 1.1 MPa
- CALCULATED MASS OF ONE GIRDER = 13.9 TONNES.

BAR LIST: FOR SQUARE GIRDER

MARK	SIZE	NO.	TYPE	X	Y	LENGTH	MASS
G1001	10	52	A	1 125	300	1 725	70
G1002	10	8	B	280		1 380	9
G1003	10	53	B	1 125		2 225	93
G1004	10	49	B	410		1 510	58
G1005	10	2	A	1 000	300	1 600	3
G1006	10	12	D			1 075	10
G1007	10	5	STR			11 900	47
G1008	10	2	STR			11 800	19
G1028	10	6	STR			1 100	5
G2501	25	4	A	11 850	350	12 550	197
						TOTAL PLAIN kg:	511

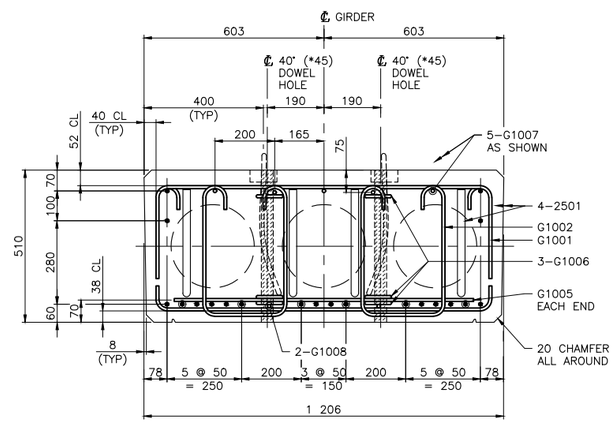

A SECTION
1:10

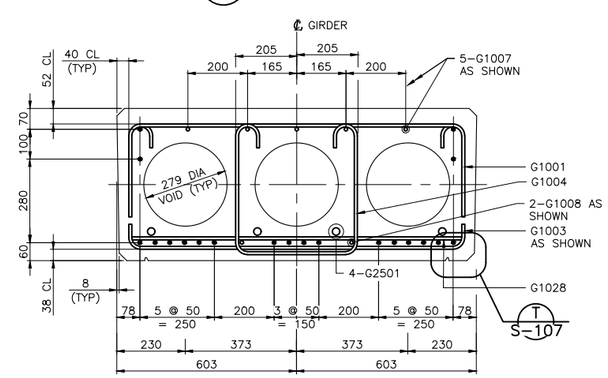

B SECTION
1:10

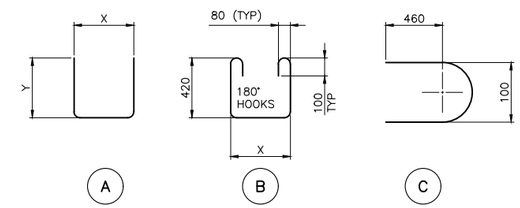

BAR TYPES
(ALL BAR DIMENSIONS ARE OUT TO OUT) NTS

* WORK THESE DRAWINGS TOGETHER: S-103-24, S104-24 AND S-107-24

Government of Northwest Territories

Consultant Logo

Rev	Date	Description	Init

REVISIONS

Government of Northwest Territories

STANDARD DRAWING
PRESTRESSED CONCRETE 12 m TYPE SL-510
INTERIOR GIRDER

DESIGNED	K. HABEL	DATE	OCTOBER 25, 2024
CHECKED	K. WILLIS	DATE	OCTOBER 25, 2024
DRAWN	T. CHIU	DATE	OCTOBER 25, 2024
SCALE	AS SHOWN		

PERMIT TO PRACTICE
ASSOCIATED ENGINEERING (B.C.) LTD.
Signature
Date 2024-11-15
PERMIT NUMBER: P 554
The Association of Professional Engineers, Geologists and Geophysicists of NWT/NU

PREPARED UNDER THE DIRECTION OF
K. HABEL
ENGINEER OF RECORD
DATE OCTOBER 25, 2024

PROJECT No.

DRAWING No.
S-103-24

CANCEL PRINTS BEARING PREVIOUS LETTER

FILE: \\AE.CA\DATA\WORKING\YAN\2021-2234-00\STRU\MODEL\S-103-24.DWG
PLOTTED : October 25, 2024